MASS: kg

ALL DIMENSIONS ARE IN-mm

BENDING: K-FACTOR:
MACHINING:
TAPPING:

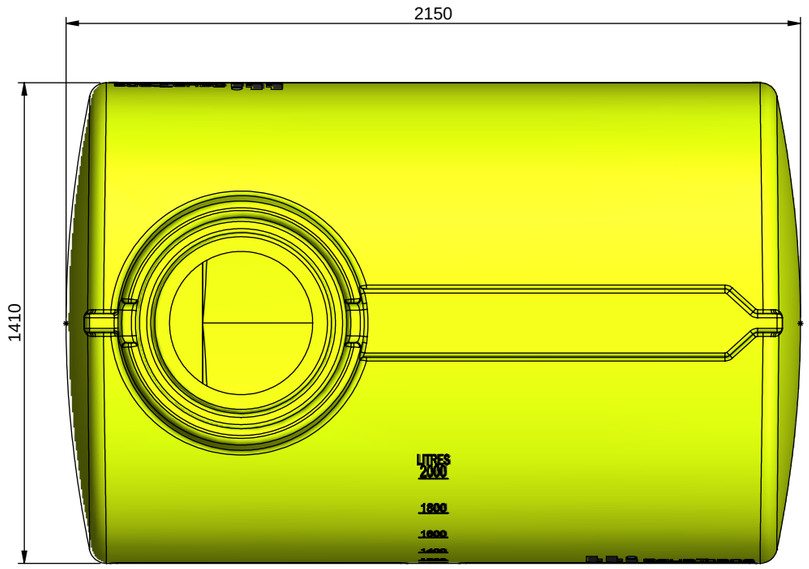

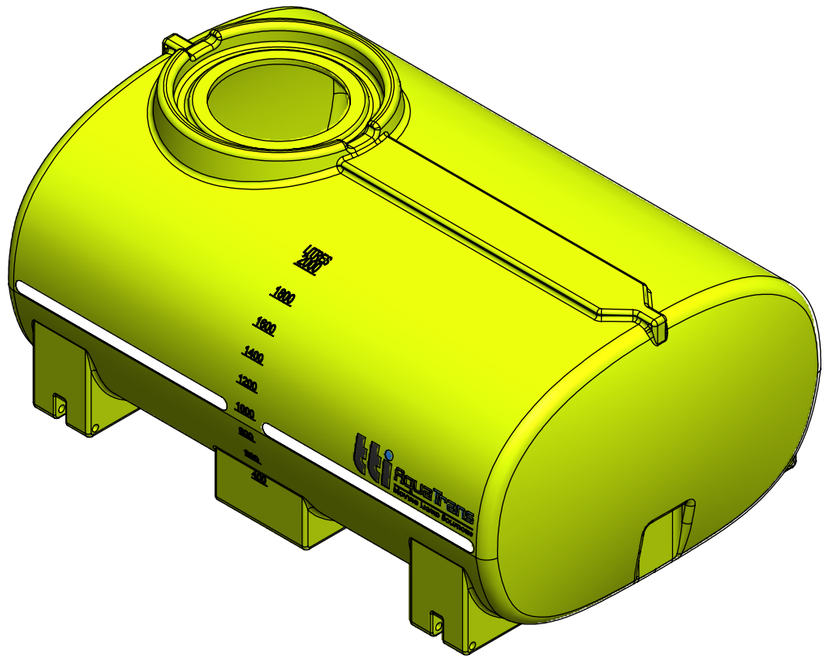

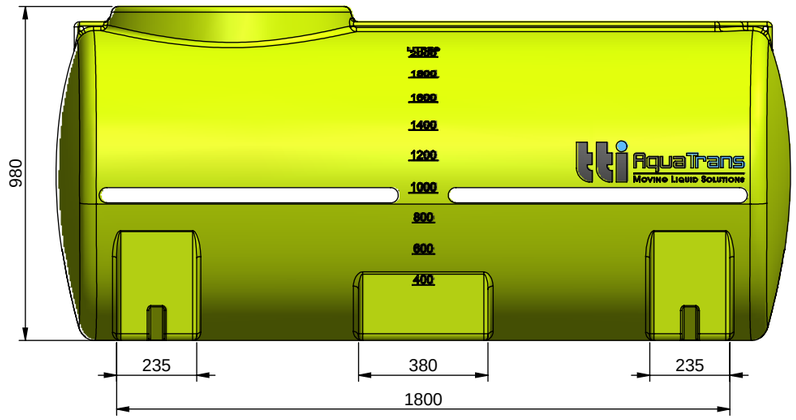

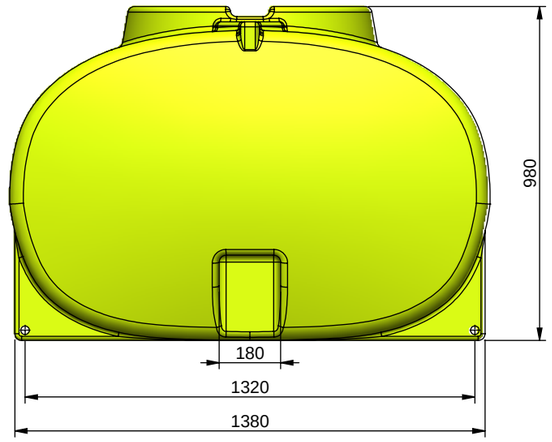

MATERIAL: LLDPE
MATERIAL SIZE:

NOTES:
1. WORK TO DIMENSIONS. DO NOT SCALE.
2. REMOVE ALL VISIBLE BURRS.

GENERAL TOLERANCES UNLESS NOTED
Ã 0 Ñ0.5
Ã 0.0 Ñ0.25
Ã 0.00 Ñ0.1
Ã ANGLE Ñ1/2Ã
Ã FINISH 3.2Õm

NOTES	REV	DESCRIPTION	DRN	CHK/APP	DATE

TransTank International
Australia's Safest Tanks and Trailers

This drawing is the property of TransTank International. It cannot be copied in part or in full with out the written permission of TTI.

SCALE	NONE	
SHT SIZE	A3	
DATE	23/04/2019	
DRN	ED	
CHK	RB	
APP	RB	

DWG NO. PTC02000SG

REVISION 1 OF 1

DESCRIPTION 2000L AQUA TANK

FILE NAME TANK DRAWING