	FABRICATION	WELDING
TIME ESTIMATE	hrs	hrs
TIME ACTUAL		

WEIGHT: NA kg

ALL DIMENSIONS ARE IN-mm

SHEET 1 OF 1

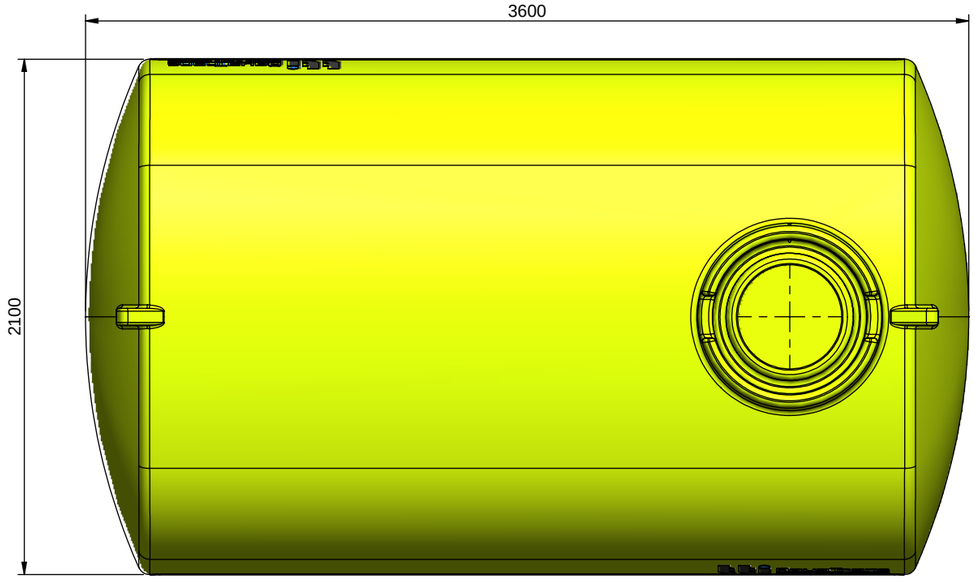

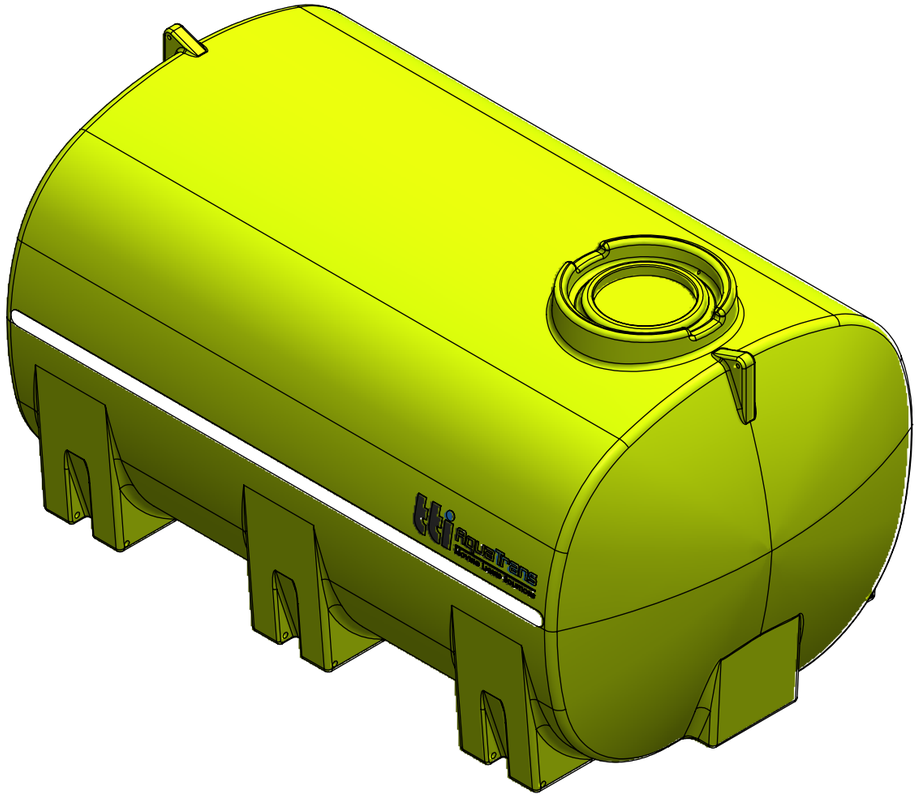

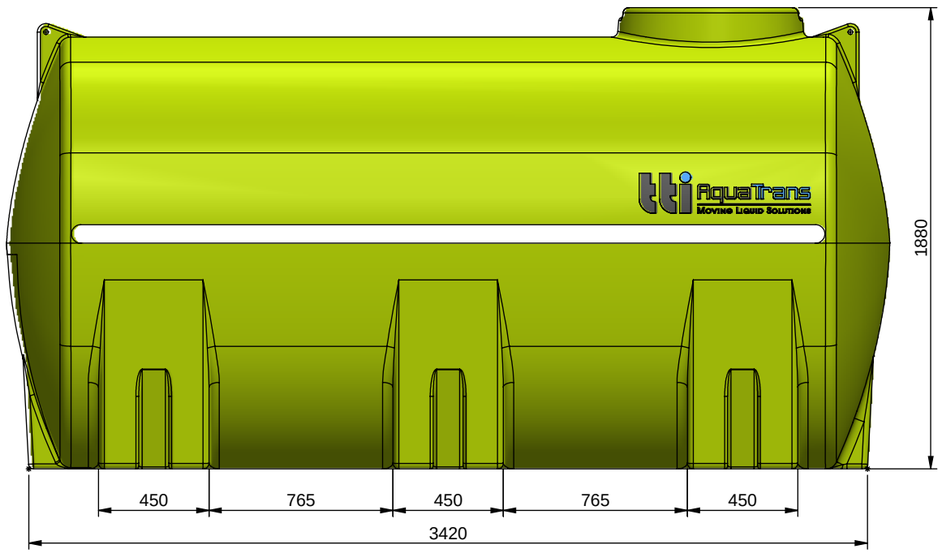

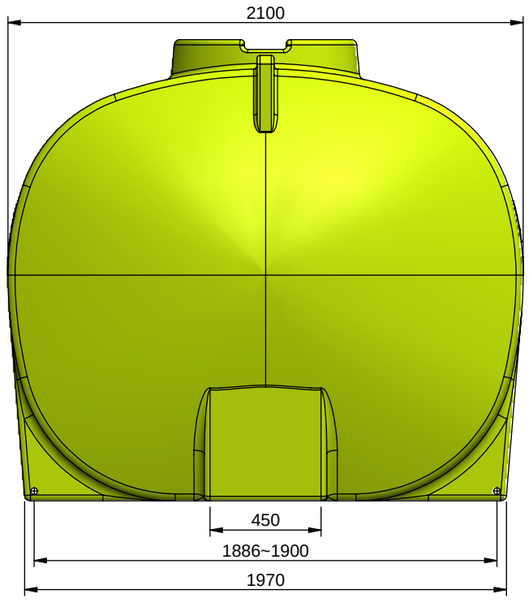

MATERIAL: POLY
MATERIAL SIZE:
FINISH:

NOTES:
1. WORK TO DIMENSIONS. DO NOT SCALE.
2. REMOVE ALL VISIBLE BURRS.
3. ALL EXTERNAL WELDS TO BE FULLY WELDED AND FILLET SIZE TO BE THE SIZE OF MINIMUM MATERIAL THICKNESS, BUT NO LESS THAN 4mm, U.O.S
4. ALL PIPEWORK TO BE FULL PEN BUTT WELDS

GENERAL TOLERANCES UNLESS NOTED
Â 0 Ñ1
Â 0.0 Ñ0.5
Â 0.00 Ñ0.25
Â ANGLE Ñ1/2Á
Â FINISH 3.2Õm

NOTES	REV	DESCRIPTION	DRN	CHK/APP	DATE

TransTank International
Australia's Safest Tanks and Trailers

This drawing is the property of TransTank International. It cannot be copied in part or in full with out the written permission of TTI.

SCALE	NONE	JOB NO.	REVISION AV1
SHT SIZE	A3		
DATE	26/03/2019	DESCRIPTION	10000L TIPPER TANK
DRN	ED		
CHK	JH/HS	ASSY ST/TT	ITEM CODE
FAB	WH	PURC EW	PTC10000ASG